AURALED ILLUSTRO

Installation instructions

Model No.AL-Bollard-18W Power. 18W

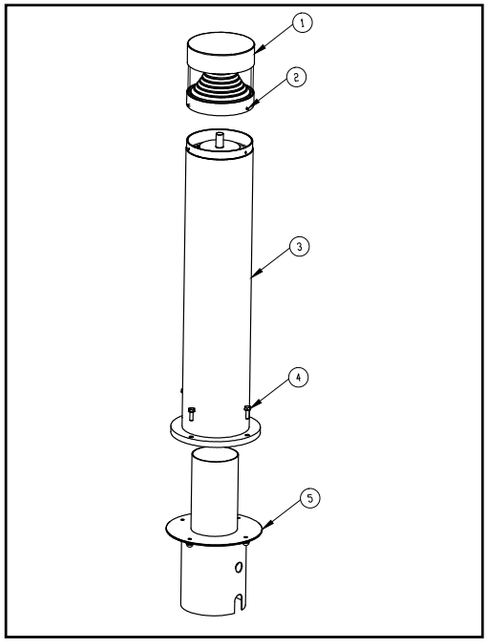

1. For Root mount:
a) Dig out a hole for the root mount to sit within.
b) Place a Steel bar between the two holes of the root mount for extra rigidity.
c) Bring connection cable through the base to connect inside the body.
d) Pour wet cement into the hole, place in root mount and set ensuring the base is level.

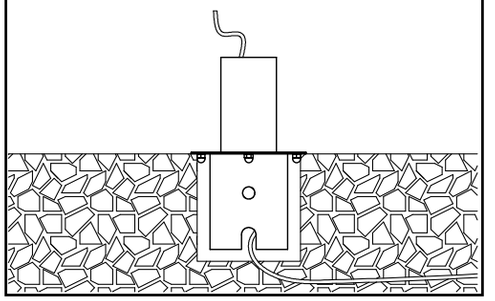

2.Make a connection to the head feed using a in line waterproof connector..

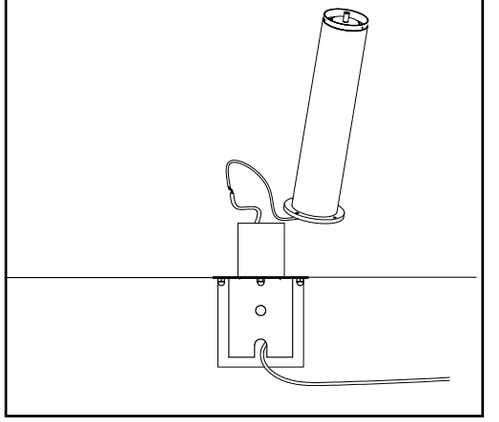

3.Place the Body onto the root mount, line up the bolt positions with the base and bolt down.

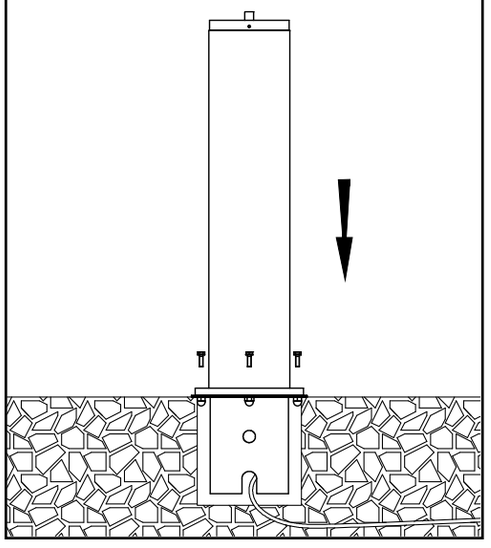

4.Place the head onto the Bollard ensuring it is completely coupled.

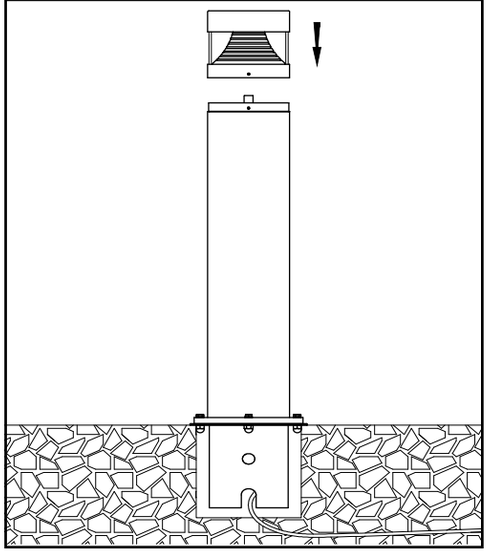

5.Use the grub screws provided to lock the head in place.

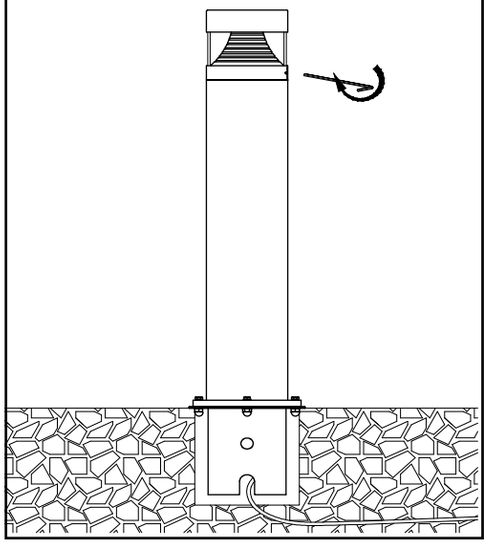

Follow installation instructions carefully.Ensure all below ground termination is totally sealed. Do not shorten the cable lengths provided on the fixture.Ensure all power is off during installation until circuit is complete.